SLAB - DUCT

INSTALLATION INSTRUCTIONS:

1- Use 1/2" sheet metal screws to attach all inlets, chairs, etc. to the slab duct.
2- See individual installation instructions for all slab duct fixtures.
3- Use Industrial sealer on all connections.

NOTE:
Used for commercial applications.

WARNING!!
Improper installation may result in damage to product or inefficiencies in the system. Use proper PPE and equipment during cutting, bending, and installation processes. If local codes differ from these instructions follow local building codes.

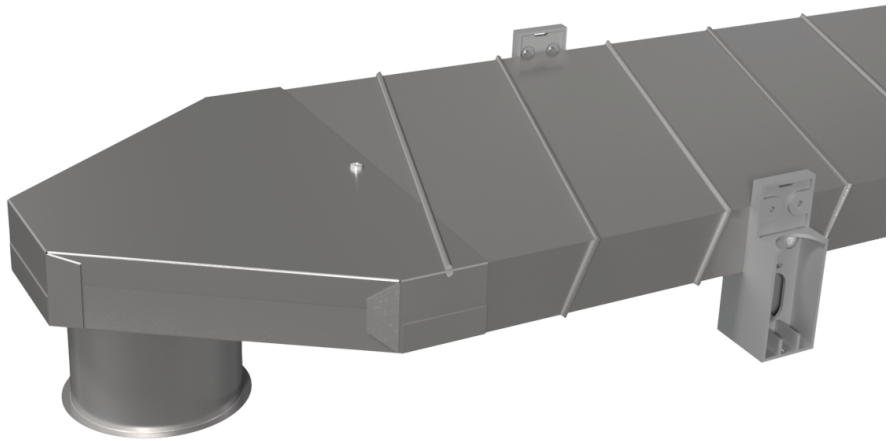

INSTALLATION VIEW

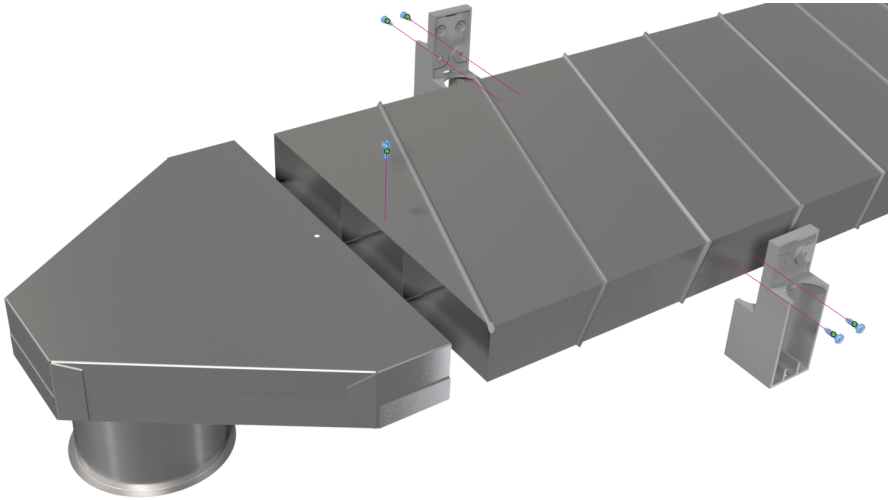

INSTALLED VIEW

Specifications are subject to change without notice or obligation. All Prairie Heating products are guaranteed against defective material.